MAAN ALUMINIUM LTD.

MOBO - 01

MOTOR BODY

MAAN SEC.-7935

3.738 Kg/Mtr.

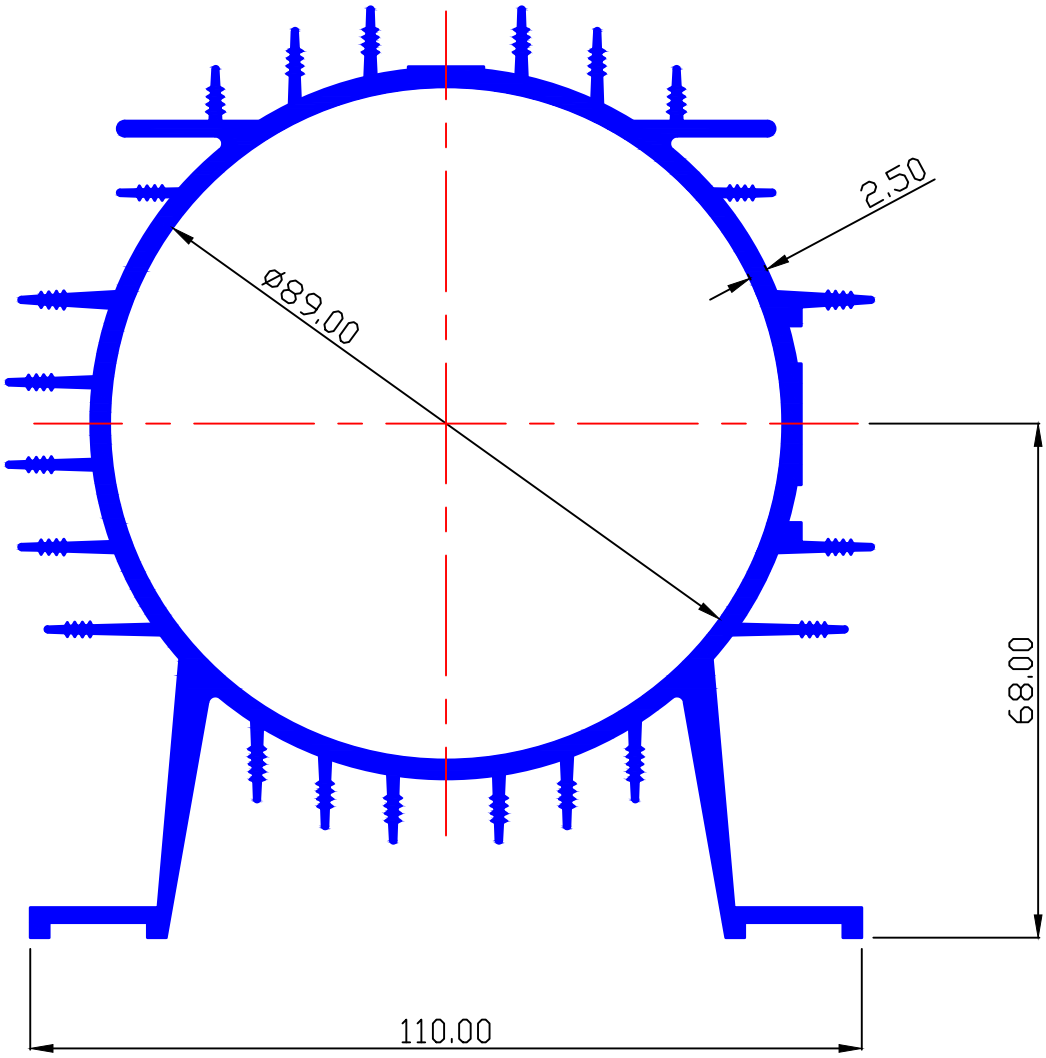

MAAN ALUMINIUM LTD.

MOBO - 02

MOTOR BODY

MAAN SEC.-7933

5.436 Kg/Mtr.

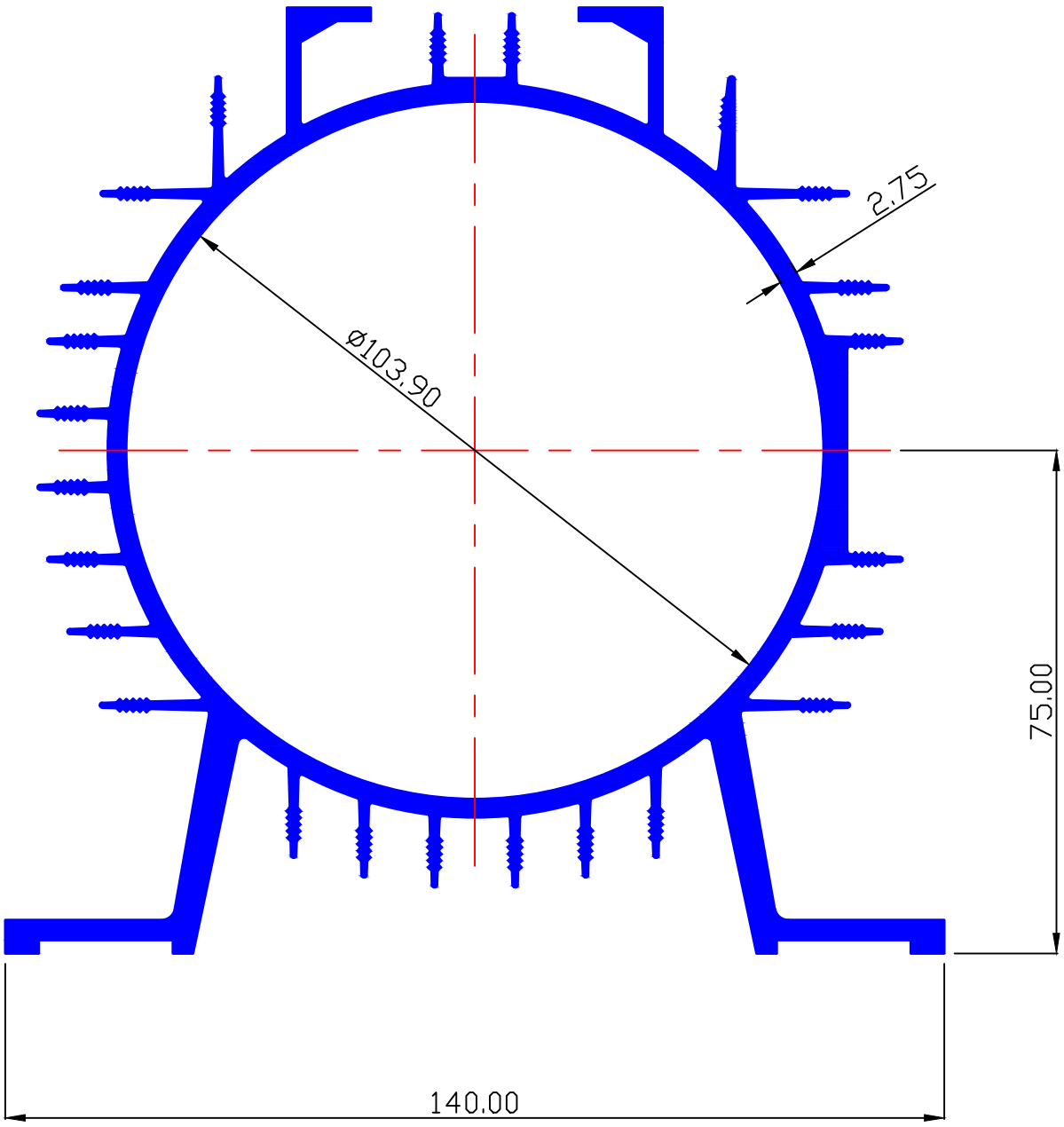

MAAN ALUMINIUM LTD.

MOBO - 03

MOTOR BODY

MAAN SEC.-7909

4.576 Kg/Mtr.

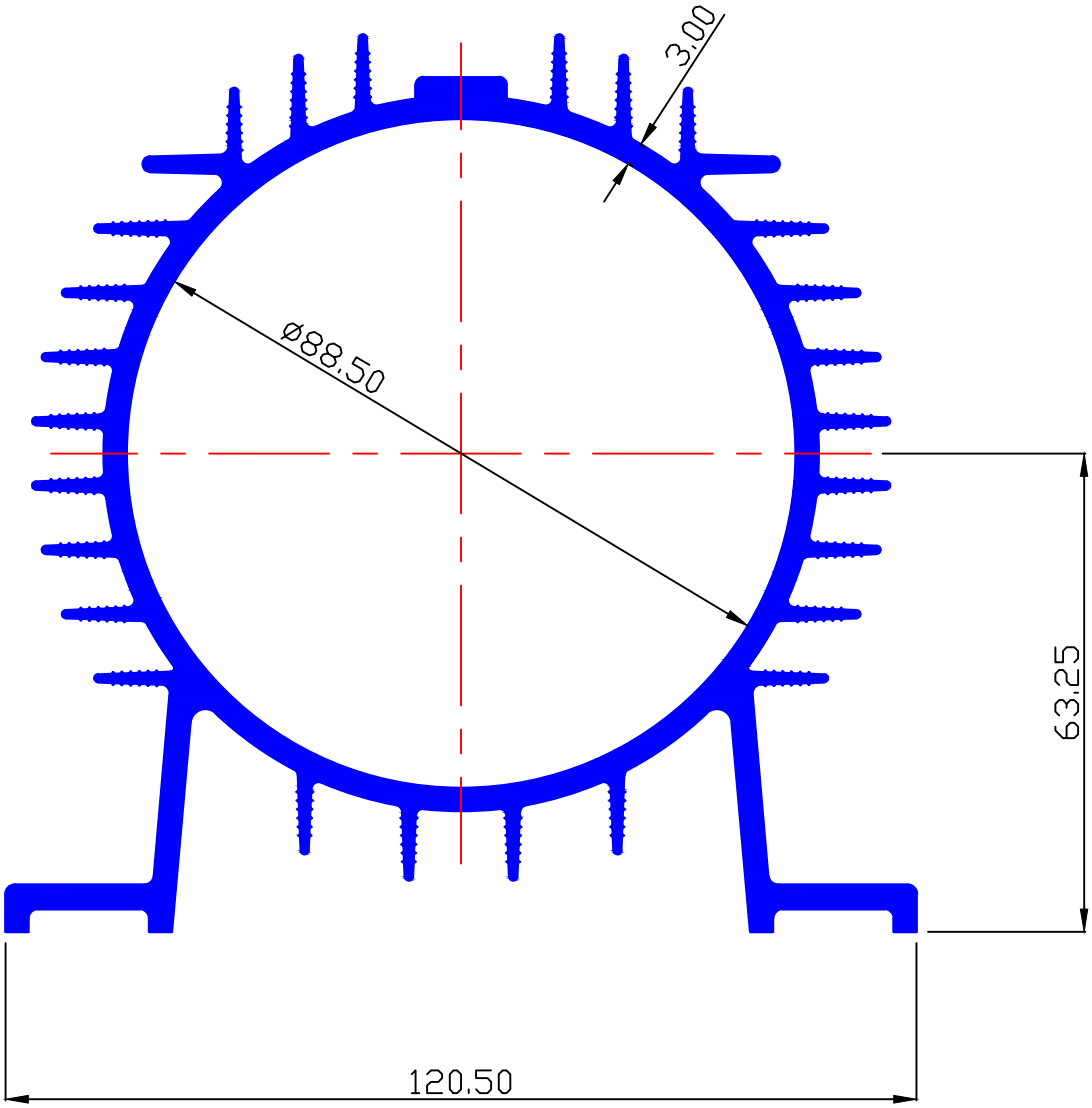

MAAN ALUMINIUM LTD.

MOBO - 04

MOTOR BODY

MAAN SEC.-7893

3.769 Kg/Mtr.

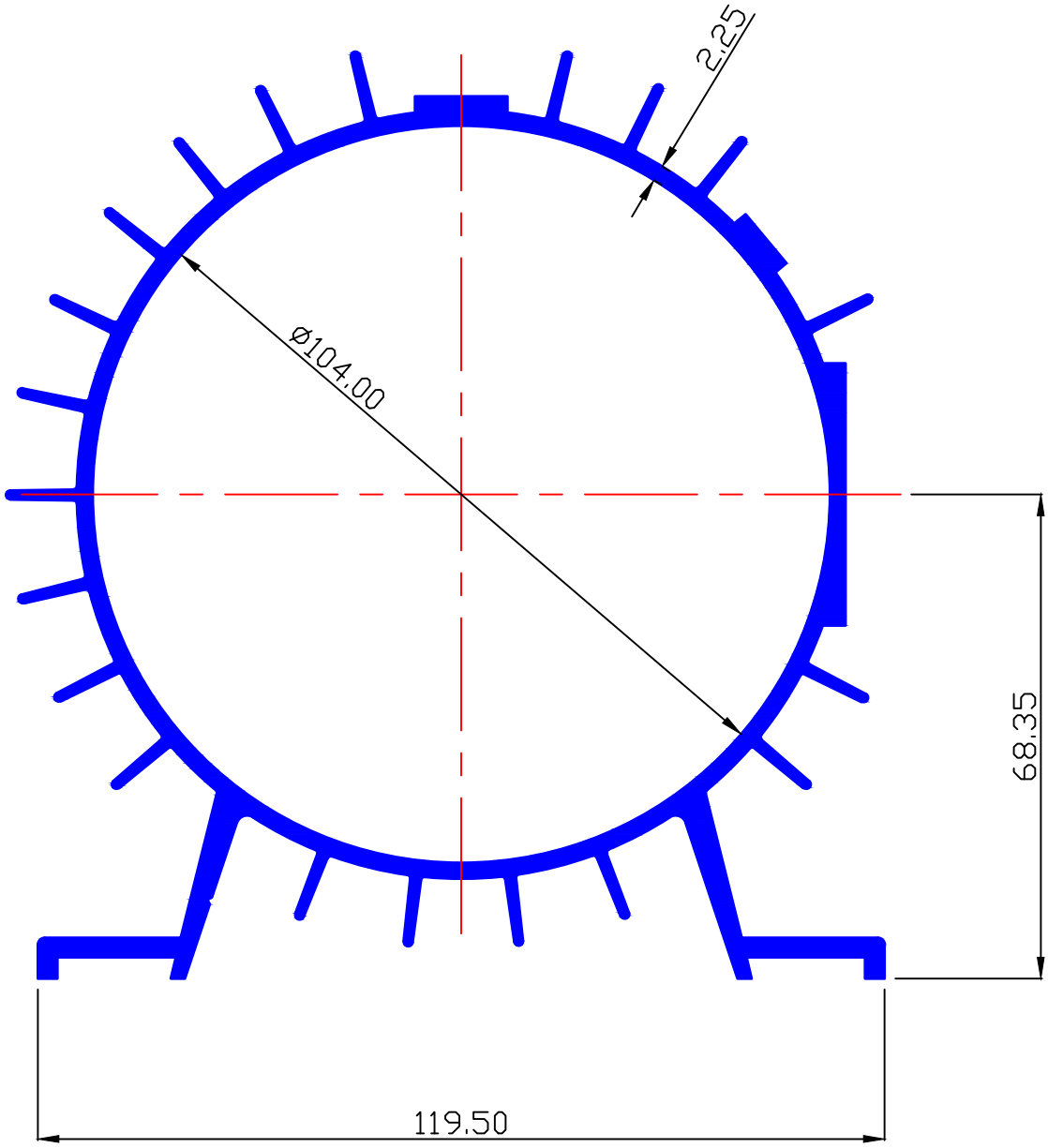

MAAN ALUMINIUM LTD.

MOBO - 05

MOTOR BODY

MAAN SEC.-7886

5.346 Kg/Mtr.

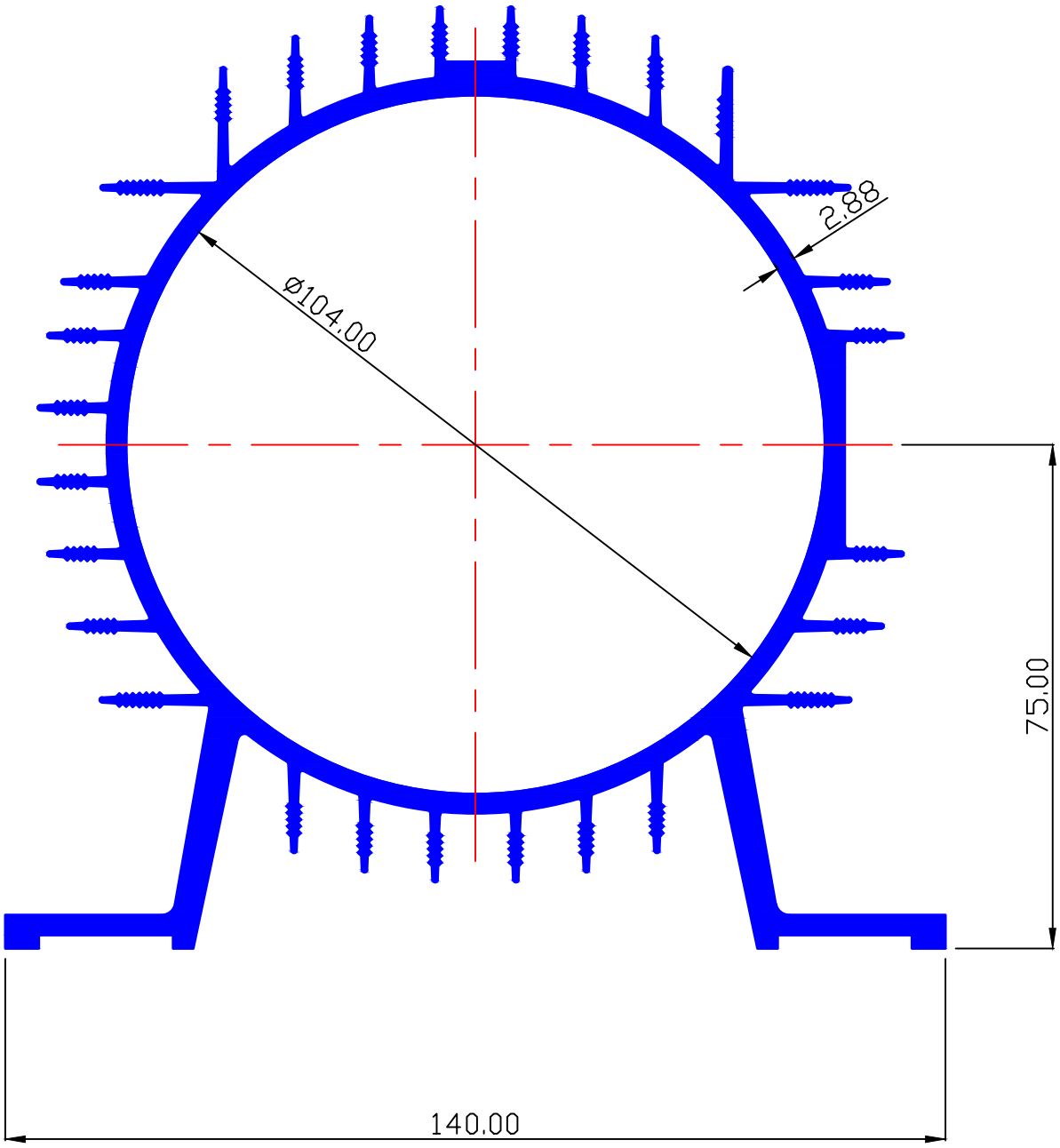

MAAN ALUMINIUM LTD.

MOBO - 06

MOTOR BODY

MAAN SEC.-89204

4.296 Kg/Mtr.

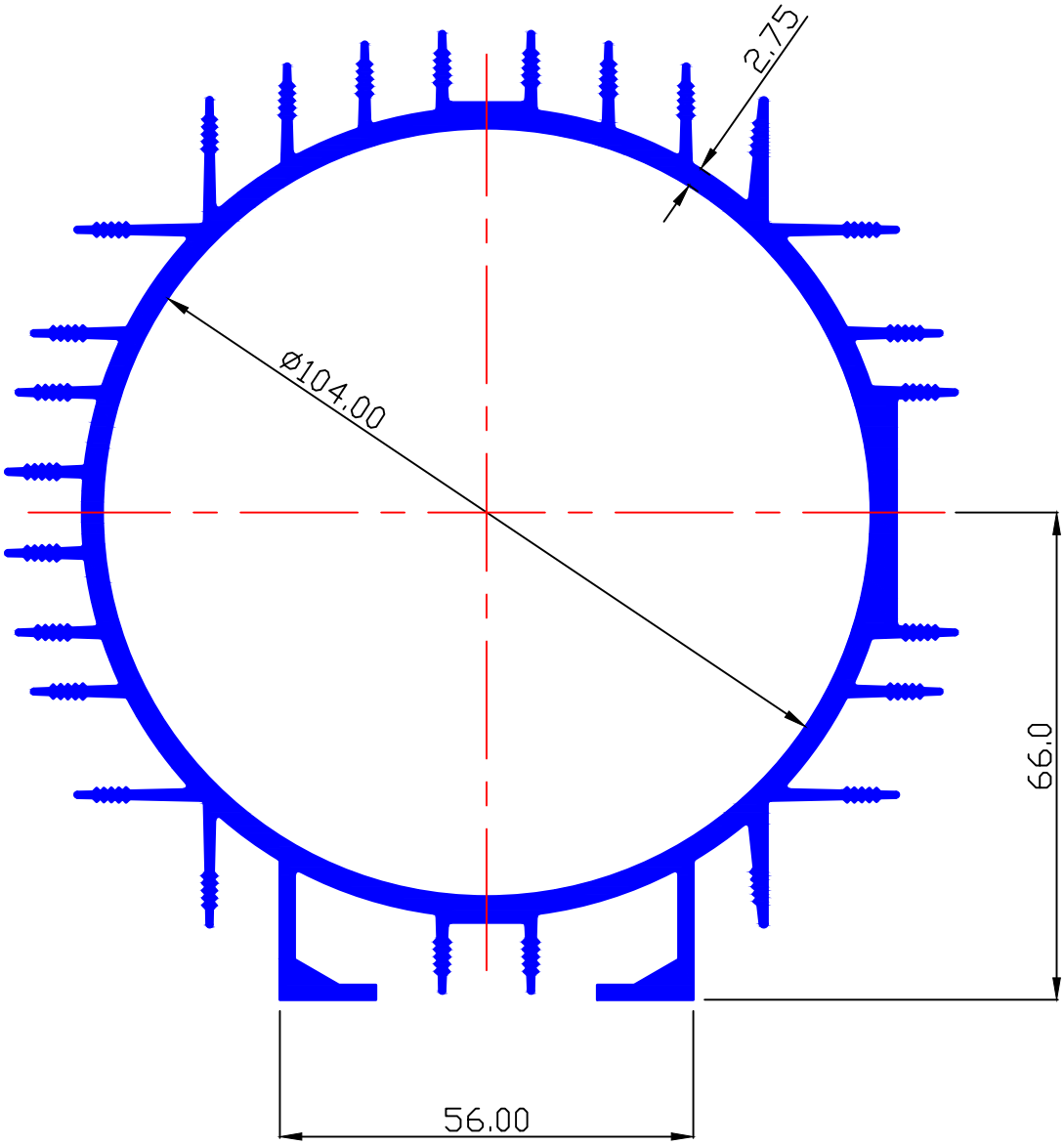

MAAN ALUMINIUM LTD.

MOBO - 07

MOTOR BODY

MAAN SEC.-89301

2.545 Kg/Mtr.

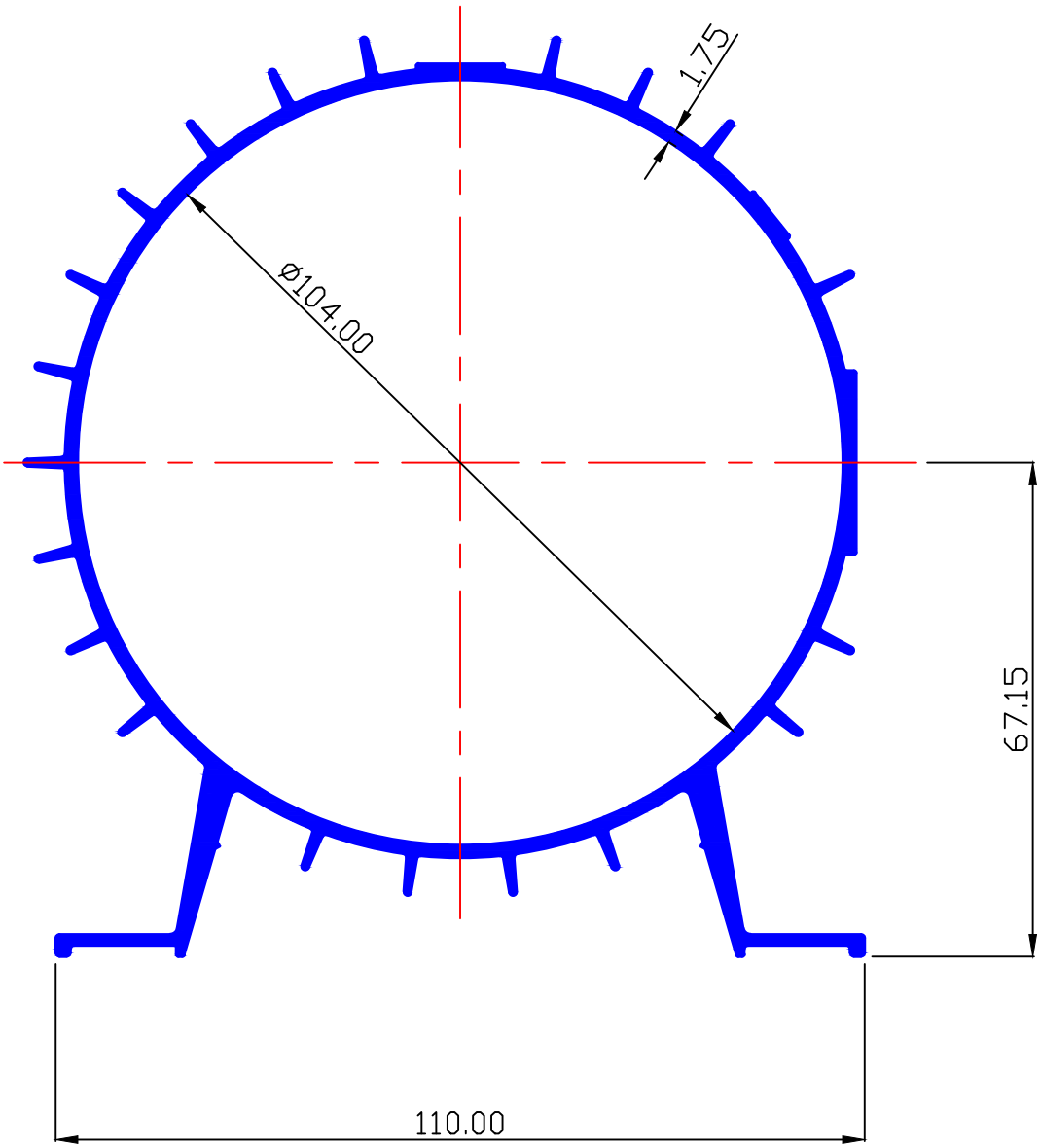

MAAN ALUMINIUM LTD.

MOBO - 08

MOTOR BODY

MAAN SEC.-89312

3.757 Kg/Mtr.

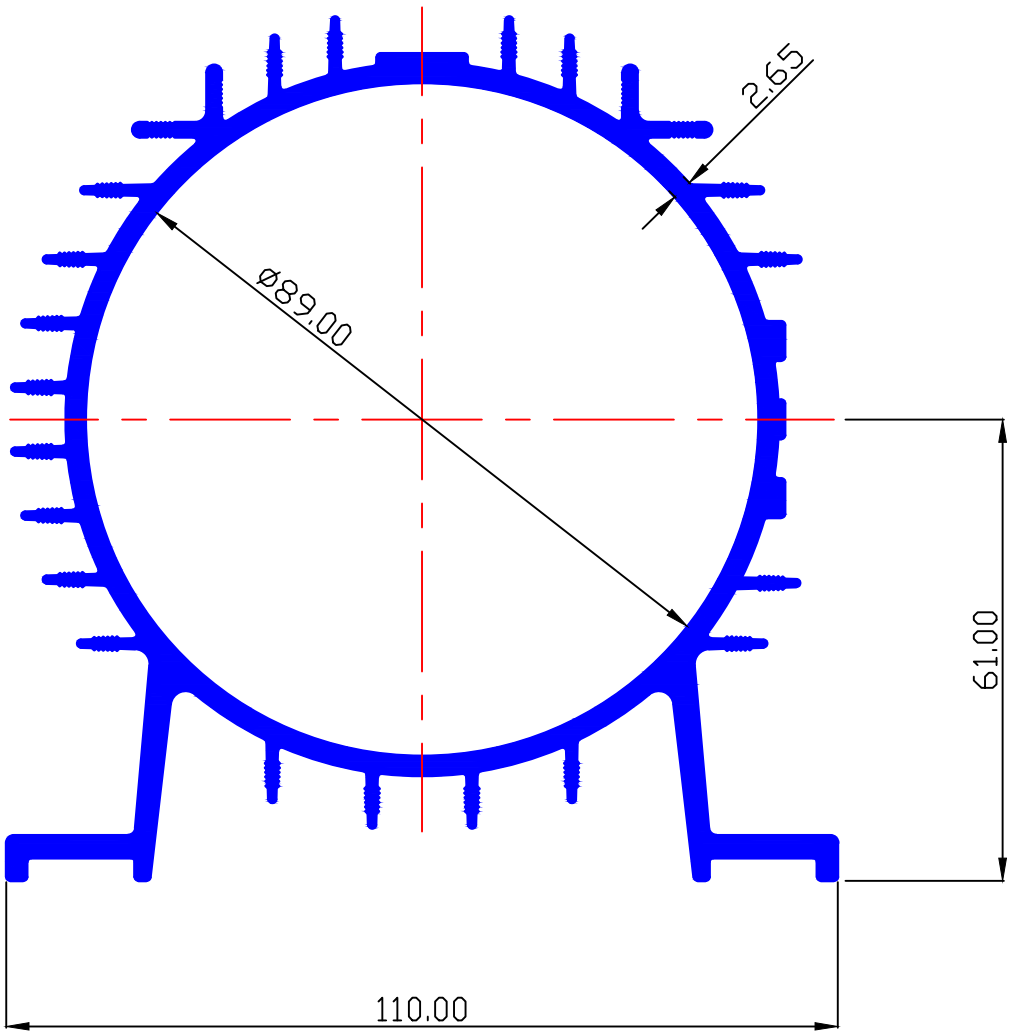

MAAN ALUMINIUM LTD.

MOBO - 09

MOTOR BODY

MAAN SEC.-89336

3.884 Kg/Mtr.

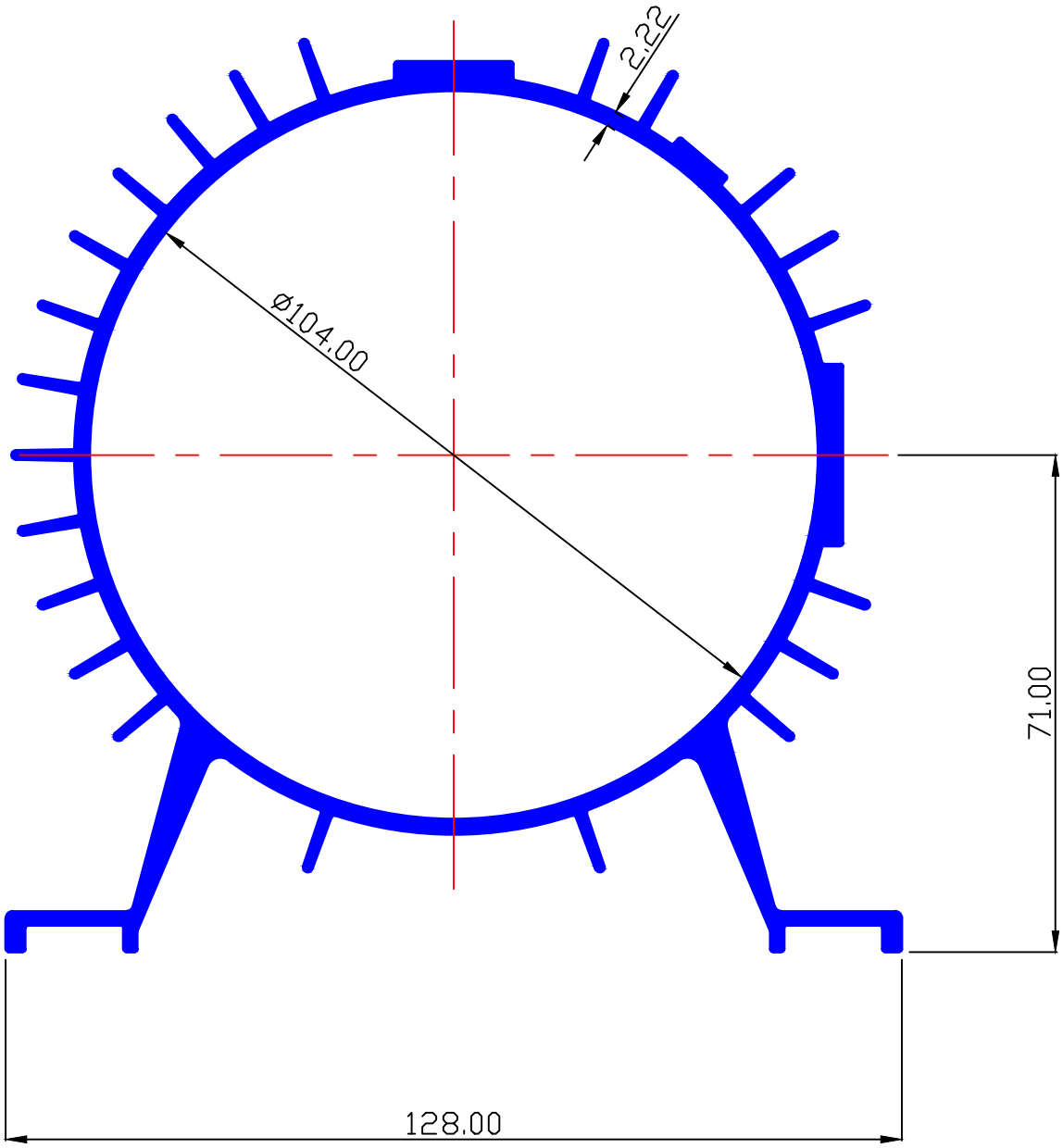

MAAN ALUMINIUM LTD.

MOBO - 10

MOTOR BODY

MAAN SEC.-89361

3.071 Kg/Mtr.

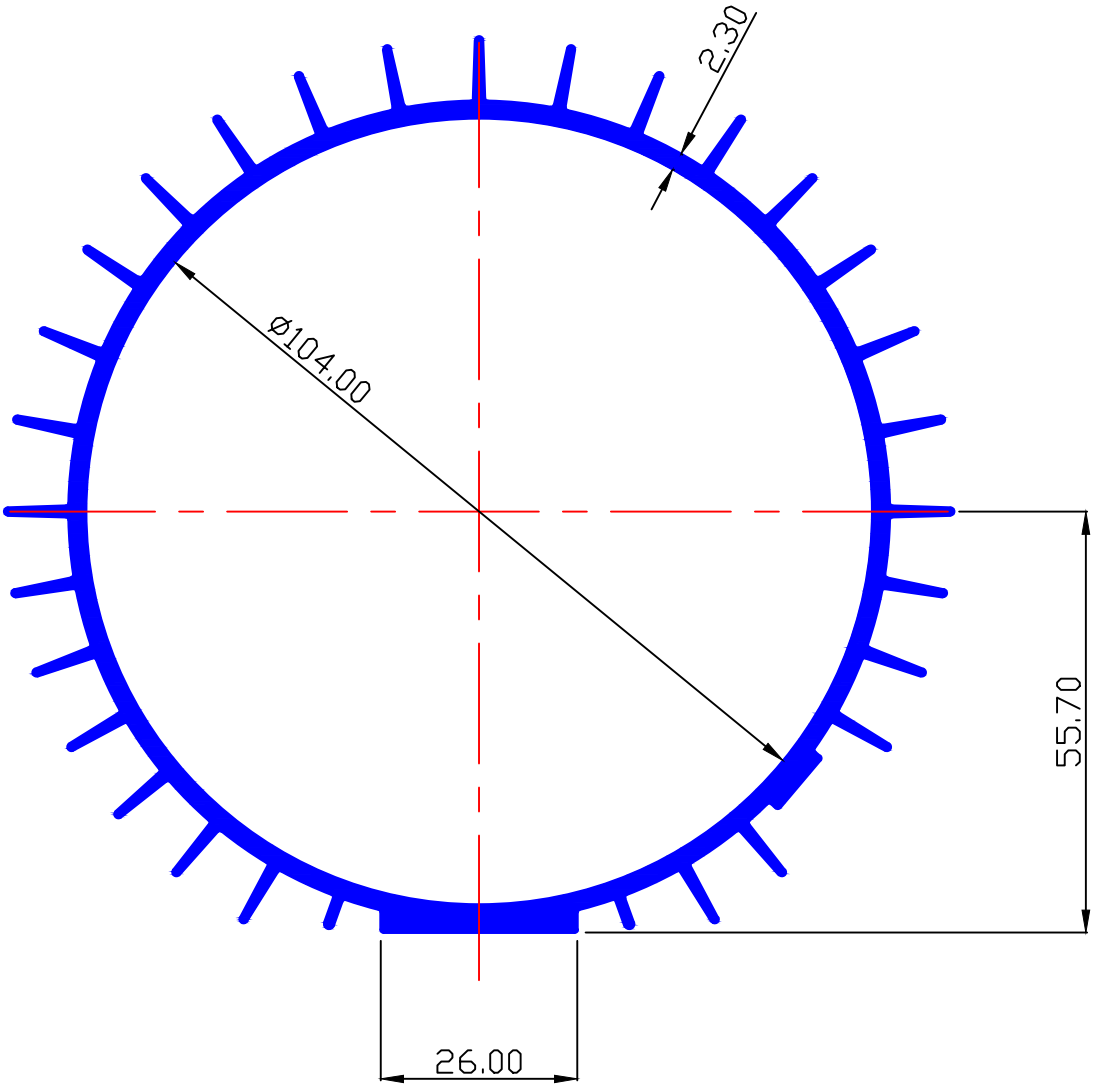

MAAN ALUMINIUM LTD.

MOBO - 11

MOTOR BODY

MAAN SEC.-89442

2.905 Kg/Mtr.

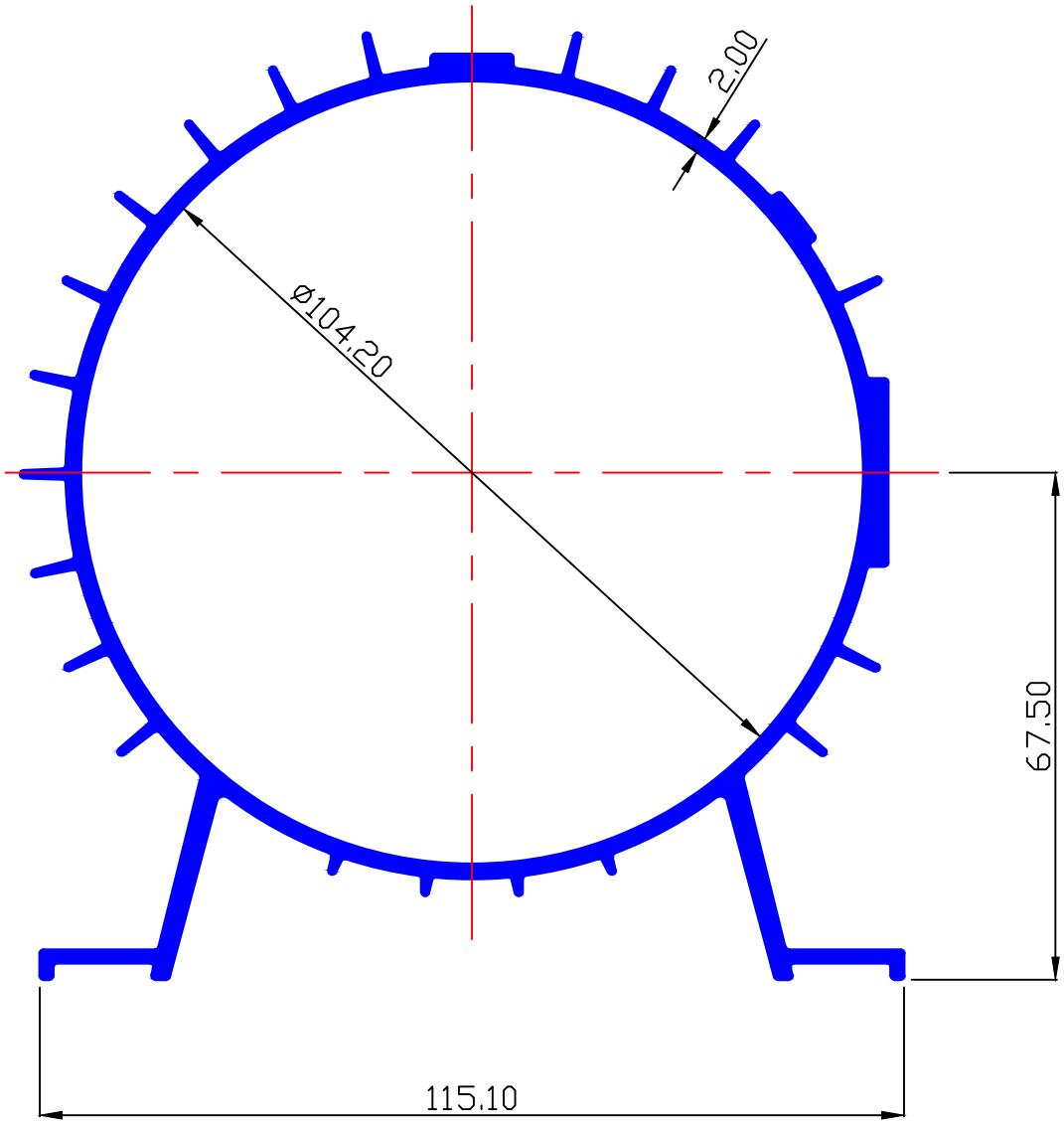

MAAN ALUMINIUM LTD.

MOBO - 12

MOTOR BODY

MAAN SEC.-89512

5.720 Kg/Mtr.

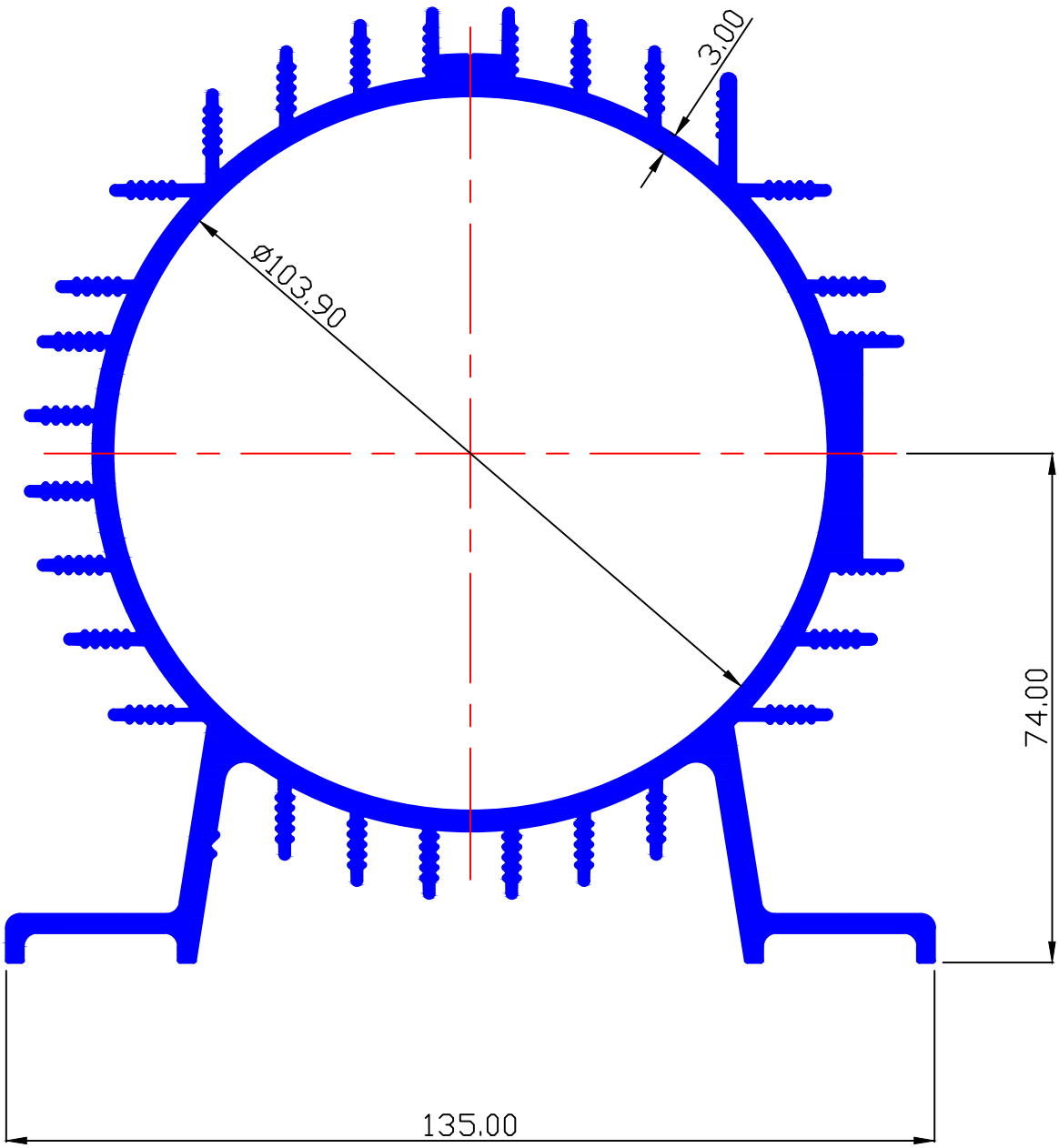

MAAN ALUMINIUM LTD.

MOBO - 13

MOTOR BODY

MAAN SEC.-89743

2.430 Kg/Mtr.

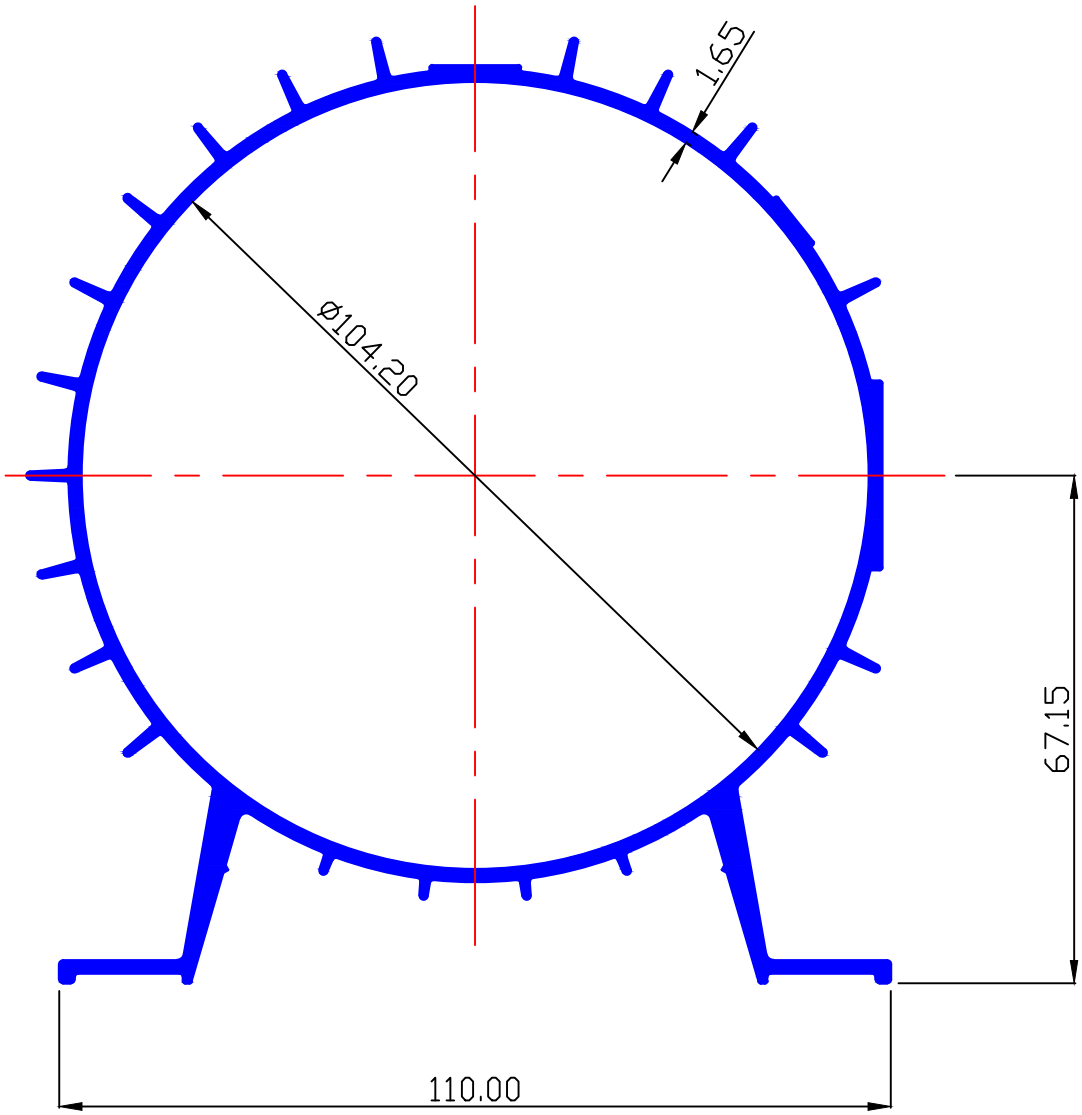

MAAN ALUMINIUM LTD.

MOBO - 14

MOTOR BODY

MAAN SEC.-89800

3.352 Kg/Mtr.

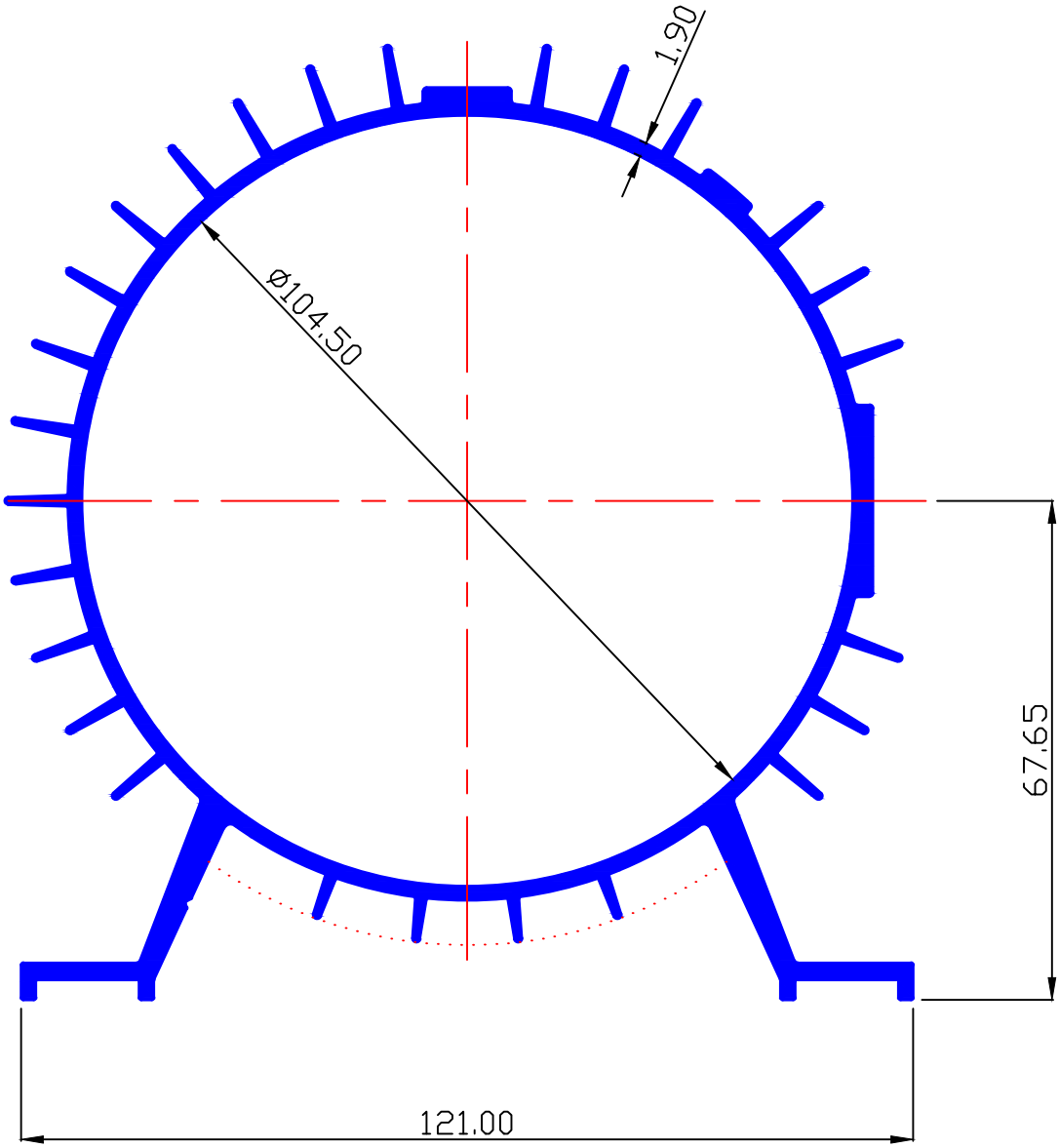

MAAN ALUMINIUM LTD.

MOBO - 15

MOTOR BODY

MAAN SEC.-89801
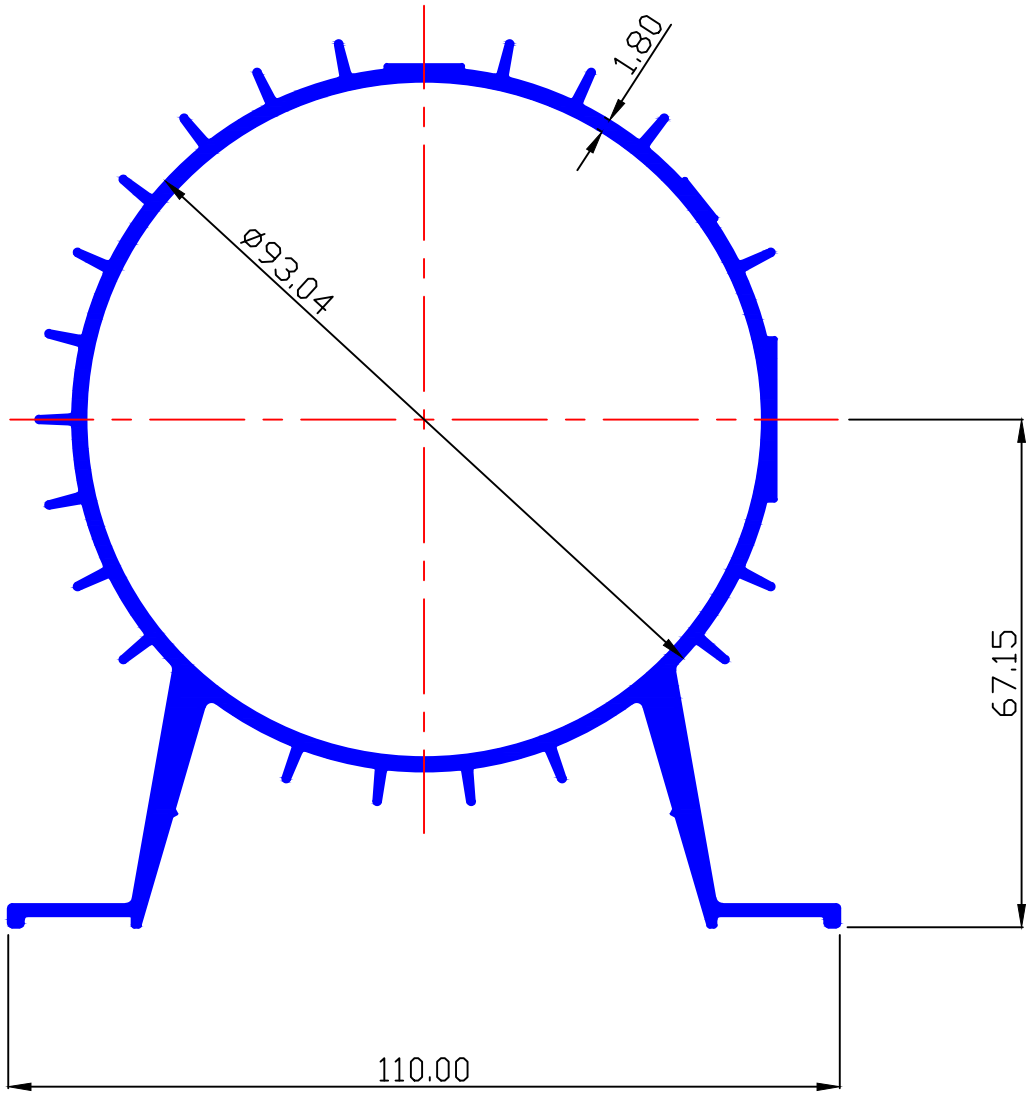
2.464 Kg/Mtr.